# AGROTECH™ ASSEMBLY INSTRUCTIONS

## PARTS LIST

| QTY | DESCRIPTION |
|---|---|
| 1 | PANEL A |
| 1 | PANEL B |
| 2 | PANEL C |
| 1 | SPINE W/SOCKET & 15′ CORD |
| 1 | REFLECTOR TOP |
| 14 | 8-32 x .375 BOLTS |
| 14 | 8-32 WING NUTS |

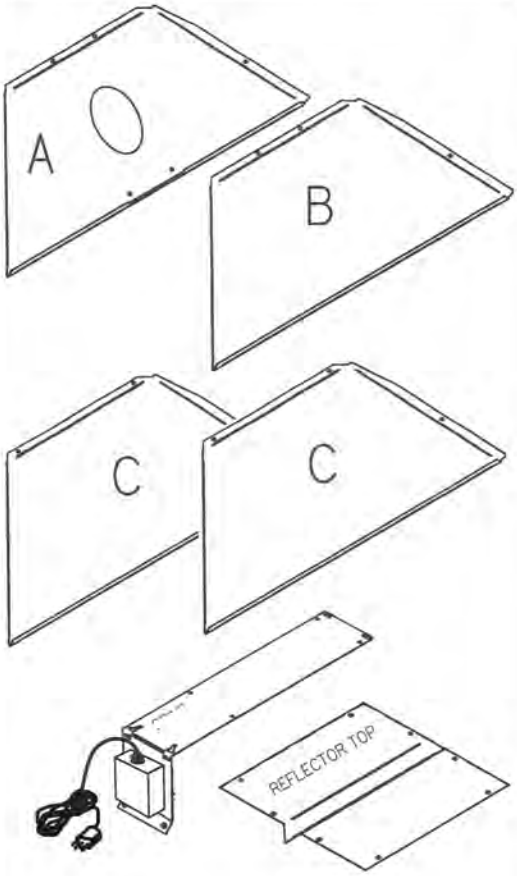

8-32 X .375 BOLTS
14 REQ.

8-32 WING NUTS
14 REQ.

## 1. ATTACH PANEL A & B TO REFLECTOR TOP AND SPINE FIRST

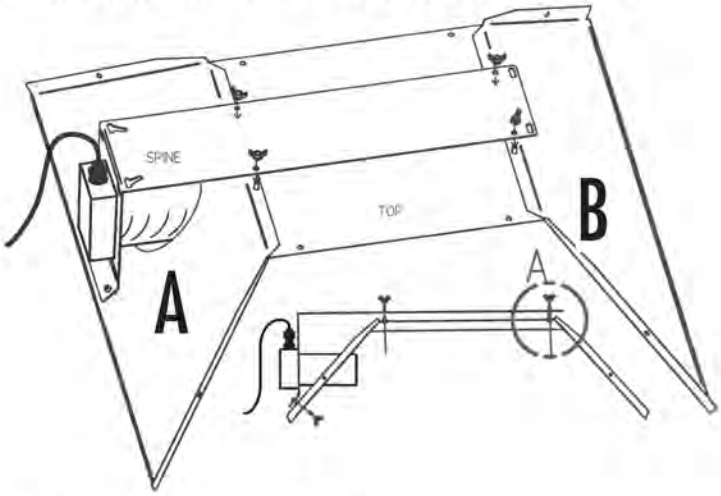


## 2. ATTACH 2 C PANELS TO THE SIDES

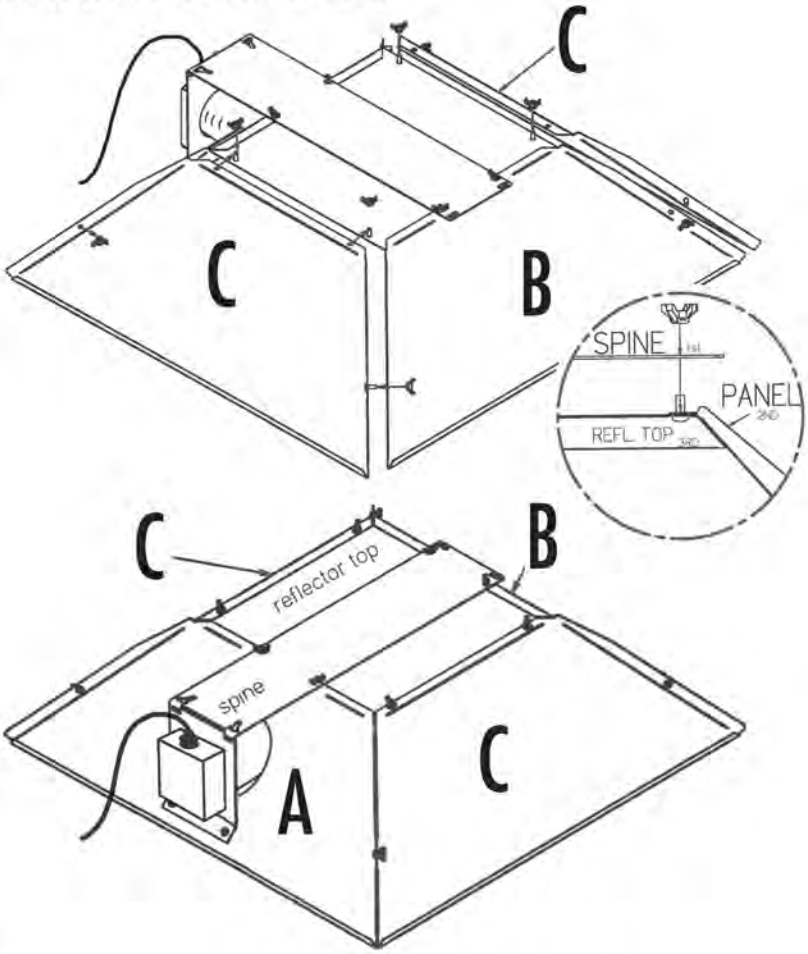


Sunlight Supply, Inc.
National Garden Wholesale.